CCG1 EMCA Type-C to Legacy USB Device Port Paddle Card Reference Design

Table Of Contents

Sheet	Description
1	Table of Contents
2	Type-C Plug/WirePad
3	CCG1 - CYPD1103-35FNXI

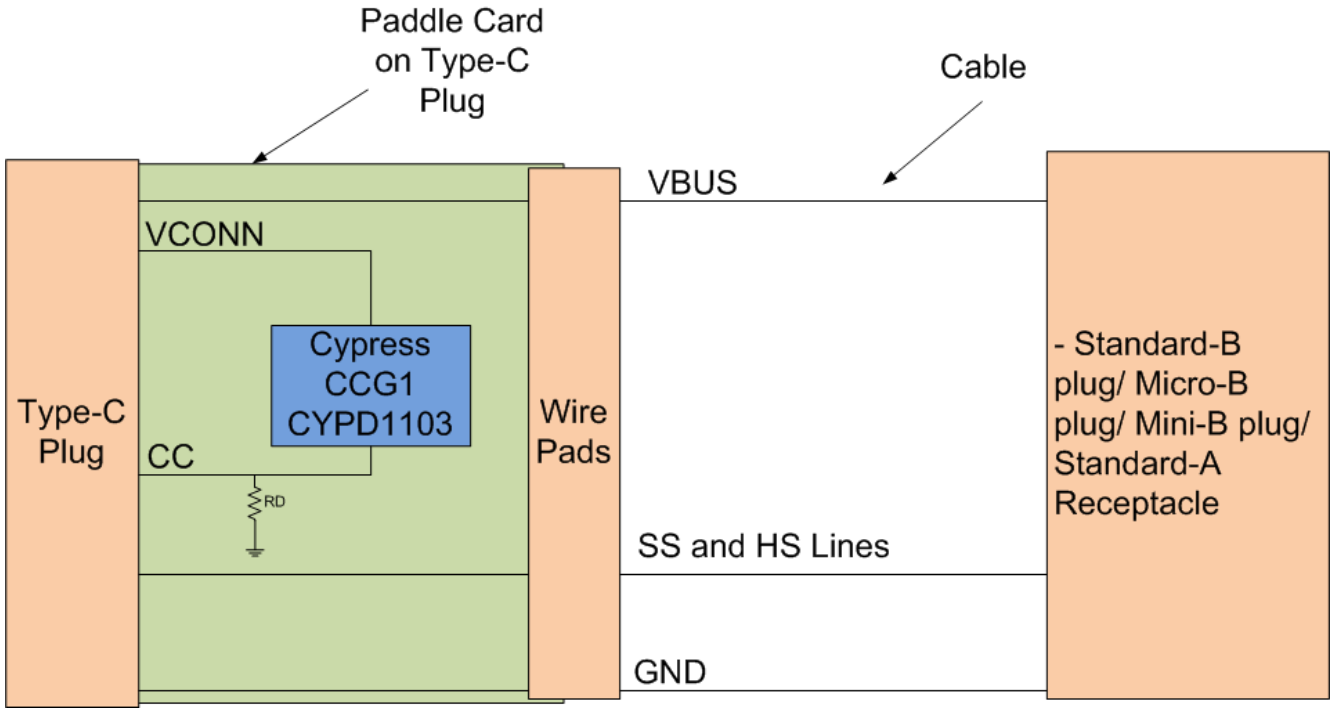

Title	CCG1 EMCA C to Legacy Device Port	
Size B	Document Number <Doc>	Rev 1
Date: Wednesday, April 08, 2015	Sheet 1 of 3	

Type-C Plug/WirePad

Note:- USB2.0 cable designs do not need SuperSpeed lines (TX1/RX1) to be routed from Type-C plug to WirePads

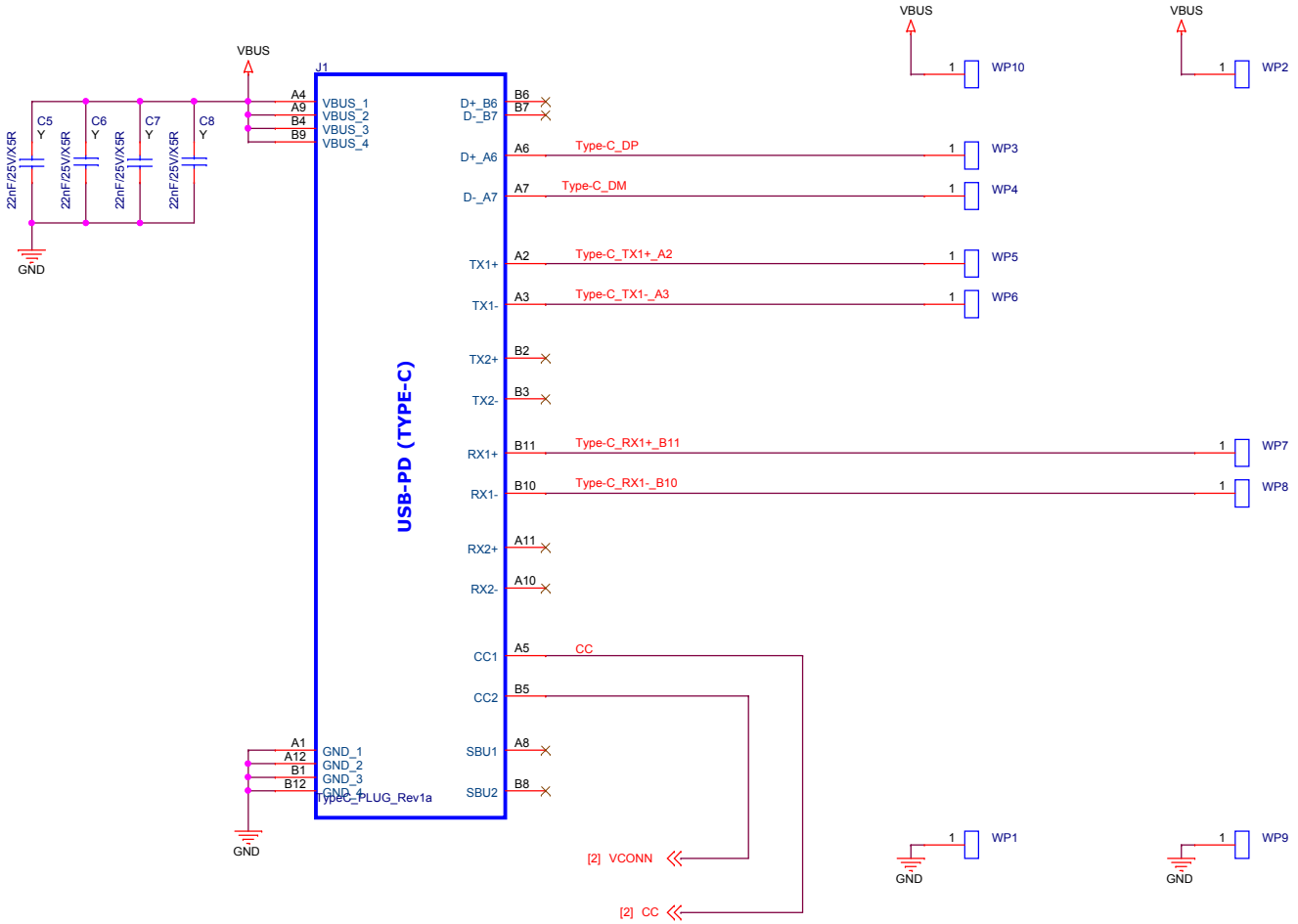

Title	CCG1 EMCA C to Legacy Device Port	
Size B	Document Number <Doc>	Rev 1
Date: Wednesday, April 08, 2015	Sheet 2 of 3	

CCG1 - CYPD1103-35FNXI

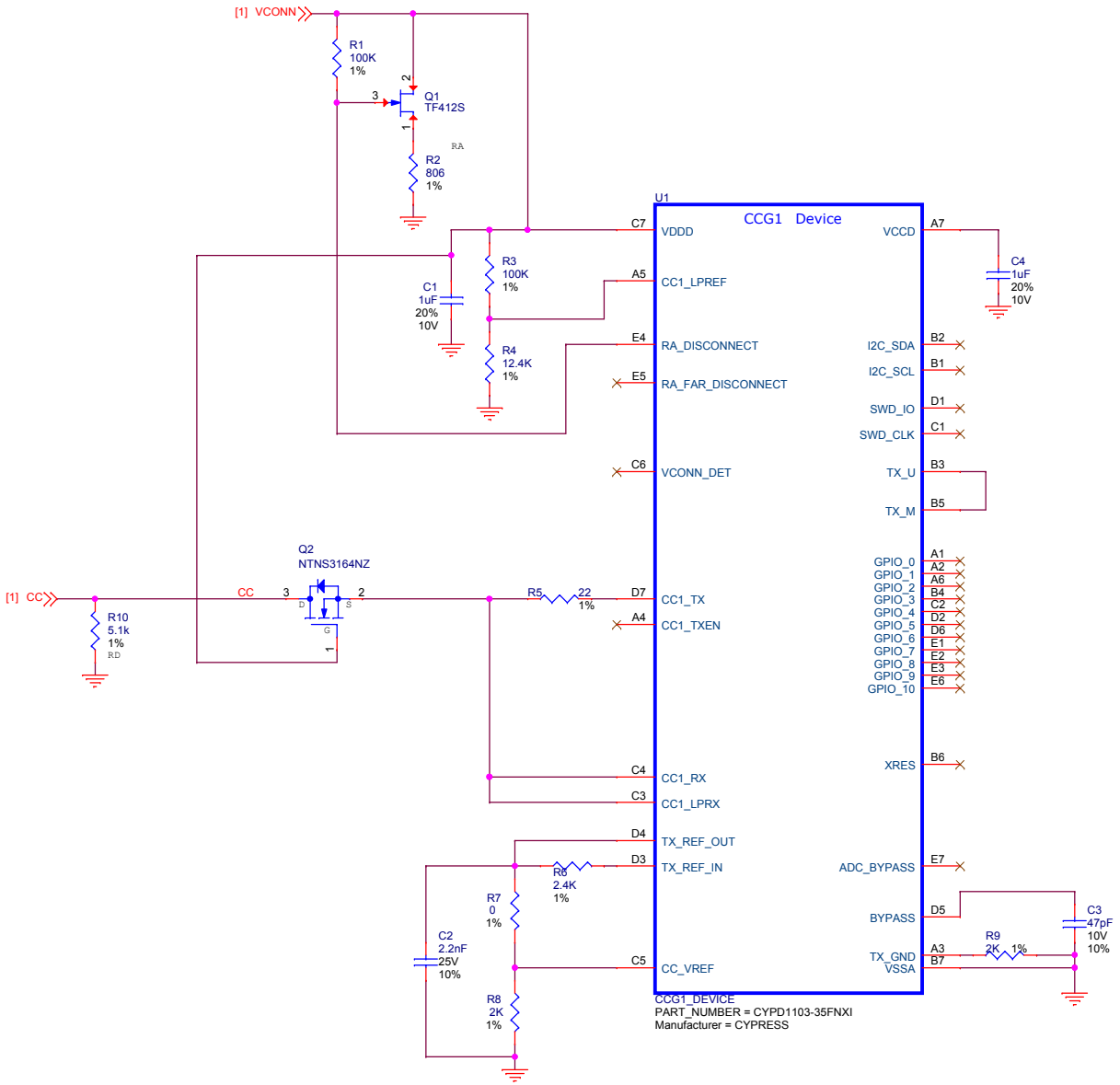

Title	CCG1 EMCA C to Legacy Device Port	
Size B	Document Number <Doc>	Rev 1
Date: Wednesday, April 08, 2015	Sheet 3 of 3	